CONDOR MT600

USER MANUAL

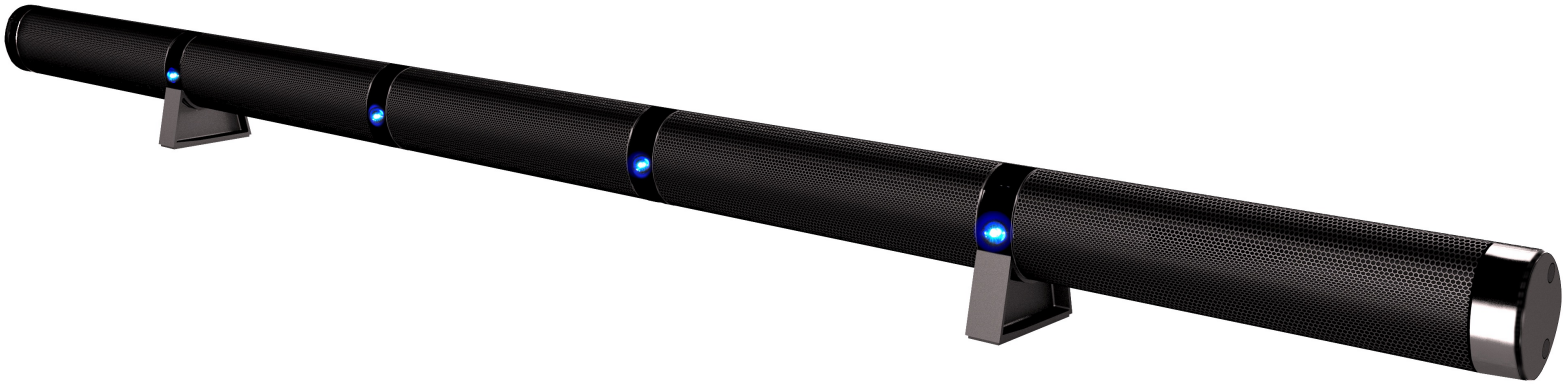

PHOENIX
Audio Technologies

INDEX

Overview .....Page 03

Connecting your Condor .....Page 04

- Speaker Signal .....Page 05
- Device Interface .....Page 06
- Powering Your Device .....Page 07

LED Display .....Page 08

Setting Delay .....Page 09

The Control Portal .....Page 10

Installing the Leg Stands/ Wall Mounts .....Page 11

Specifications .....Page 13

Warranty .....Page 14

CONDOR MT600 OVERVIEW

The Condor is a high-quality Beamforming array microphone that amplifies relevant audio information and rejects all noises and reverb. It has an exceptionally large pickup range while remaining discreet.

The Condor utilizes multiple microphones, and a powerful DSP to achieve a commanding performance.

In order to cover the entire room the Condor has an array technology that deploys seven long range beams. It examines the output of these beams, each from a fixed pre-determined direction, and keeps only the relevant audio information, while rejecting noise. This process updates its findings many times per second so that the end result is clear audio.

The Condor also deploys echo canceling, noise canceling, and an AGC algorithm so that the level of speech stays the same for both people standing next to the array as well as dozens of feet away.

This guide will help you learn how to use your Condor array and will reveal all the features that come with it.

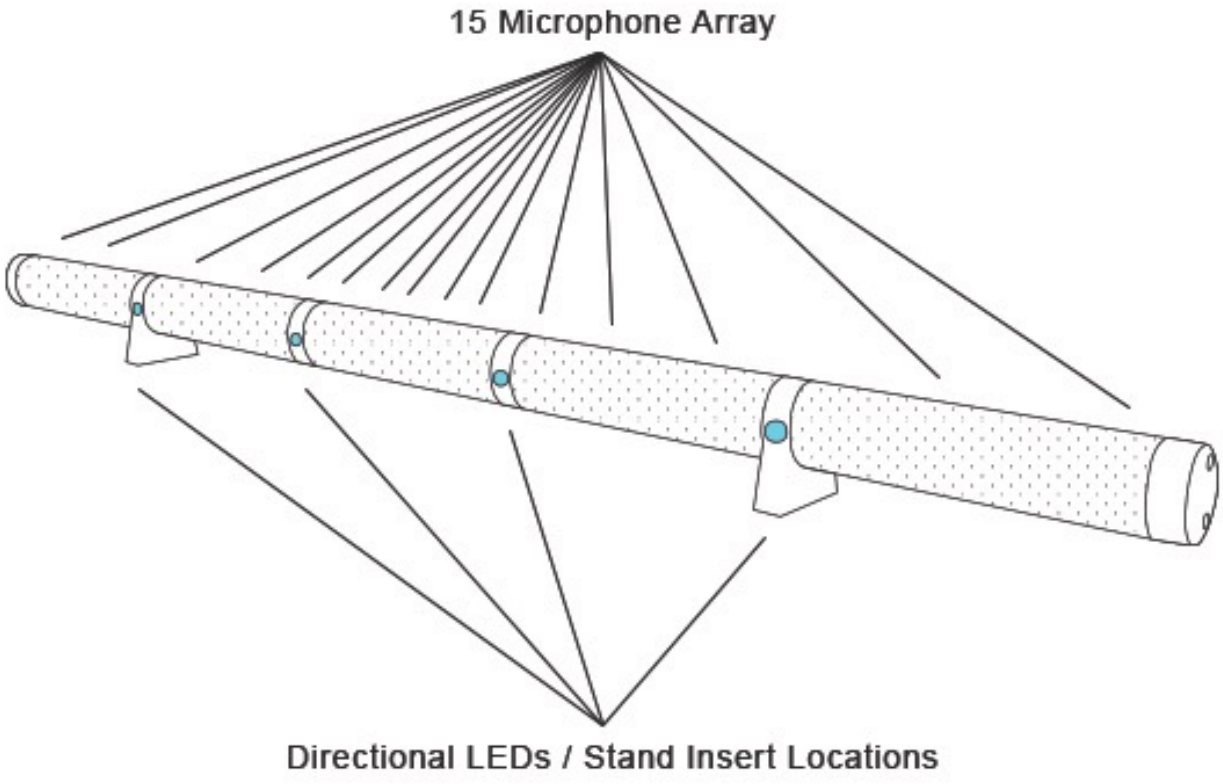

CONNECTING YOUR CONDOR

There are three steps to connecting a Condor:

- Connect a speaker signal.
- Connect into an interface.
- Power the device.

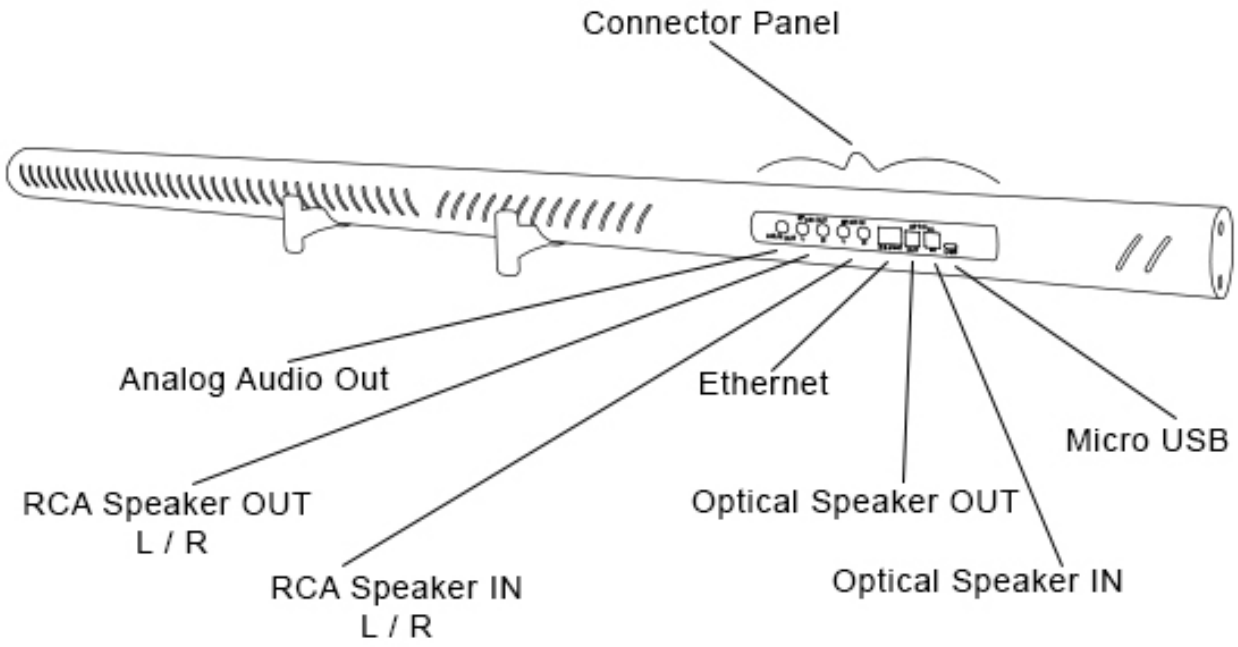

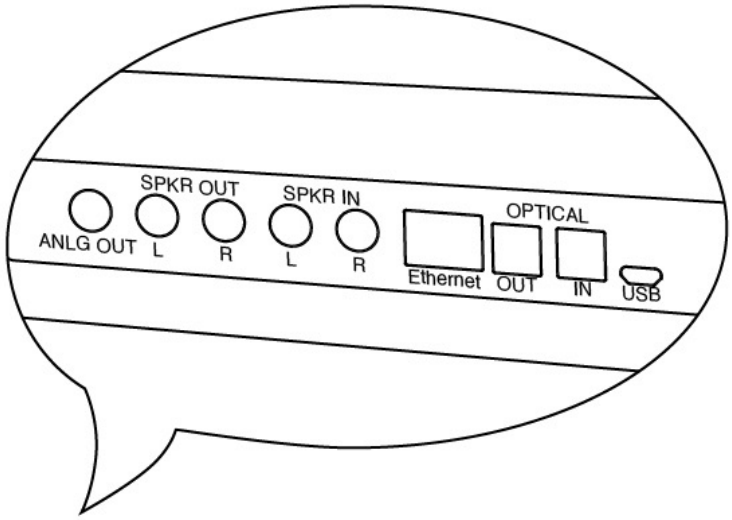

Connector Panel Detail

SPEAKER SIGNAL

To achieve echo canceling, a loudspeaker signal should be connected into the Condor. There are two options for this setup:

- OPTION ONE- Connecting a loudspeaker directly into the Condor. In this setup, the Condor will act as both a microphone and a speaker, and will feed the speaker signal directly into the external speakers of your choosing.
- OPTION TWO- The Condor will act only as a microphone. The speakers will be connected directly into the conferencing device, without going through the Condor. In order to feed a reference signal into the Condor, we will need to send the speaker signal to it from the loudspeakers. This setup is typical when using a TV's integrated speakers.

NOTE: This can only be done if the loudspeaker has an audio out connection. Without this, the Condor's echo canceler will not work.

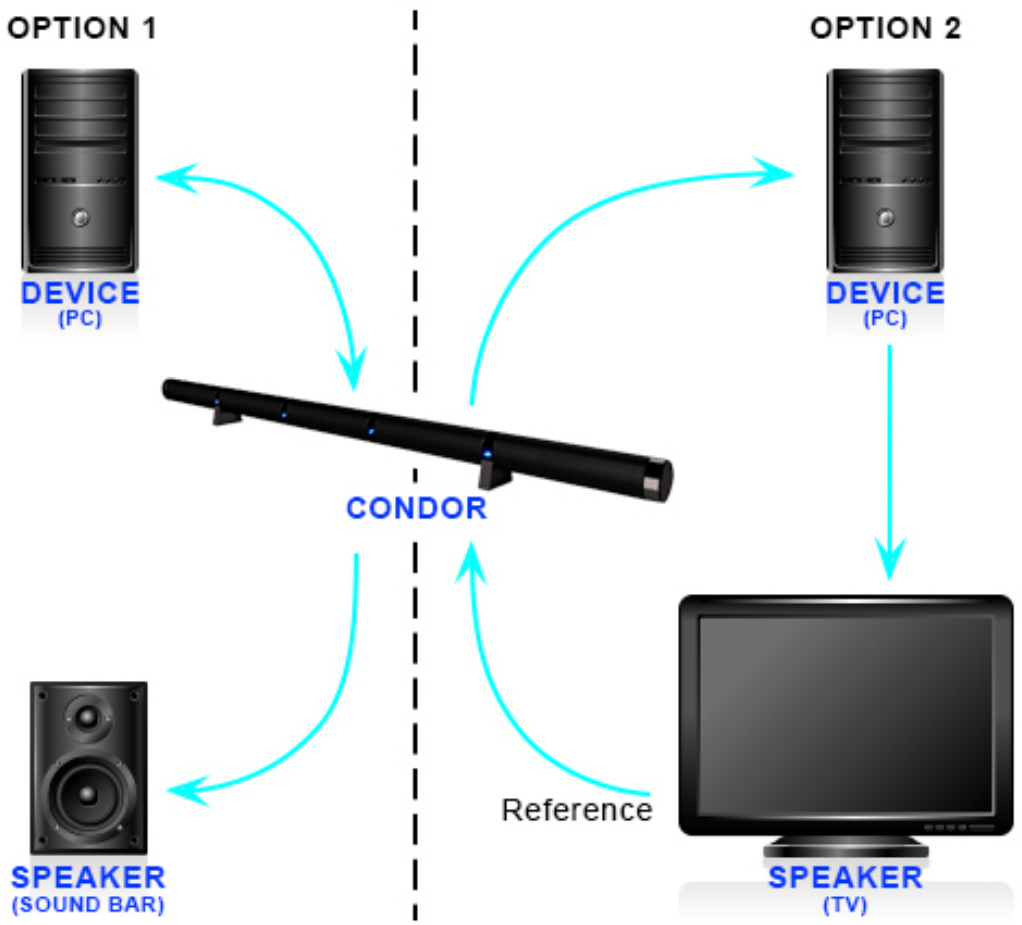

*See next page for instructions.

OPTION ONE- CONNECTING A LOUDSPEAKER DIRECTLY

- Connect the Condor to your conferencing interface/ device. Make sure the Condor is selected as both the microphone and speaker for this device.
- Connect an external amplified loudspeaker to the Condor using either the Optical OUT connector, or the Analog Speaker OUT connectors, located in the back panel of the Condor.

OPTION TWO- FEEDING THE REFERENCE SIGNAL INDIRECTLY

- Connect the Condor to your conferencing interface/device. Make sure the Condor is selected as just a microphone.
- Connect your external amplified loudspeaker directly to your conferencing device. Make sure you select that loudspeaker as the Audio OUT.
- Connect your loudspeaker's output (Speaker OUT) to the Condor via the Optical IN connector or Analog Speaker IN connectors, located in the back panel of the Condor.

DEVICE/ INTERFACE

CONNECTING TO A DIGITAL CONNECTION (USB)

This connection is for any session using your computer, such as Voice over IP applications (Skype, etc.).

- Using the USB cable provided, plug the micro USB side of the cable into the Condor (USB connector located on the connector panel behind the unit).
- Plug the USB end of the cable into any USB port on your computer or conferencing device.

No additional drivers or steps are needed. However, we do recommend downloading and using our "Phoenix Audio Setup Utility" for optimal audio control and performance. This utility can be found on our website: *www.phnxaudio.com/downloads/audiosetup/*

CONNECTING TO AN ANALOG INTERFACE

This connection is for any session using an analog line level signal such as Cisco Video Codec.

- Connect the Condor to the device using the Condor's Analog OUT connector.
- Plug the other end of the cable into your device's Analog INPUT or microphone connector. The Analog OUT connector is located in the back panel of the Condor.

NOTE: If you connect the Condor into a microphone input, make sure that that input is set as line level and not mic level.

CONNECTING TO A SIP/IP LINE

For any session using an IP telephone provider (IP/SIP).

- Using an Ethernet cable, plug one end of the cable into the Condor's Ethernet connector (located on the connector panel behind the unit).
- Plug the other end of the cable directly into your Ethernet wall socket.
- It is important that your Condor is registered with an IP service provider (See the following Control Portal section).

POWERING YOUR DEVICE

There are three ways to power the Condor.

- USB Connection- Plugging the Condor into a powered USB port will provide it with a sufficient source of power.
- 5V Power Supply- Plug the provided 5V power supply into the USB connector to power the device. This option should be used if you are connecting into an analog interface that is not providing power to the unit.
- Power over Ethernet (PoE)- If your home or office is equipped with PoE, plugging your Condor to the Ethernet via a Cat5 cable will provide power to the device.

LED DISPLAY

There are four LEDs located between the grills in the front of the unit. Each LED can emit an either blue or red light.

LIGHT INDICATIONS

Function	BLUE Lights	RED Lights
Direction of voice being picked up	Lights point towards voice direction	
Device powered on	Lights running right to left, followed by left to right	
Device searching for an IP address	Lights accumulating right to left, clearing, and repeating	
Device finding an IP address	All four lights flashing	
Device failed to locate an IP		All four lights flash three times
Mute		All four lights continuously flash until function is disabled
Telephone Ringing	All four lights will flash until call is picked up	
End of call		All four lights will appear for a few seconds
Programing	Lights will run side to side until programing is complete	

- Direction- BLUE LED lights will display the direction of the voice it is currently picking up.
- Power on- indicated by BLUE lights running right to left followed by left to right
- Searching for IP address- indicated by BLUE lights accumulating right to left, clearing, and repeating the above.
- Finding an IP- right after searching for an IP display, all four BLUE lights will flash.
- Failed to find IP- right after searching for an IP display, all four lights will flash RED three times.
- Mute- all four lights will continuously flash RED until mute is deactivated.
- Telephone ringing- all four lights will flash BLUE until call is picked up.
- End of call- all four lights will turn RED for a few seconds
- Programing- when the unit is updating software BLUE lights run side to side until programing is complete.

SETTING DELAY

NOTE: Making sure that your Condor's delay is set properly is crucial to the performance of the echo canceler. If you're experiencing echo while operating the Condor, chances are that your delay is not set properly.

WHAT IS DELAY

Delay is when the sound coming out of the speakers is not in sequence with the reference speaker's signal that is coming into the Condor. This will cause the echo canceler to fail.

WHY IS THERE DELAY

Sound delay occurs when a TV signal tries to make up for its video processing time by artificially stalling the audio. This feature is embedded in every TV by its manufacturer. The delay in all TVs will differ.

SYNCING THE DELAY

When plugging the Condor to a TV, make sure to first connect the speakers before powering the unit. Once the Condor is powered, it will automatically play chirping sounds (four signals) that it will use in order to calculate the delay. After calculating the delay, the Condor will automatically set its delay time. This setting will be saved and used unless changed manually. Please note that next time you power your Condor it will not replay the signals.
If for some reason the Condor did not automatically set its delay time, or if you are using a different TV, you can manually set, change, or reset the delay time by using the Phoenix Audio Testing Wizard located on our website: *www.phnxaudio.com/downloads/testingwizard/*

THE CONTROL PORTAL (SETTING UP THE SIP)

The online control portal will allow you to control and adjust all of your IP phone settings. To access:

- Obtain the Condors IP address by using the Phoenix Audio SIP Dialer App or through your router.
- Open a web browser and type in your Condor's IP address in the address bar and press enter.
- A Username / Password prompt will appear. Enter ***admin*** as your username and ***1234*** as your password, then click on "Log In".

NOTE: To access the portal, your computer must be located on the same LAN as the Condor.

PORTAL OVERVIEW

QUICK SETUP

Adjust the LAN, SIP Proxy, and Registrar options.

PERSONAL SETTINGS

Directory

Add contacts to phone.

Speed Dial

Assign up to 10 numbers for the speed dial list.

Tones

Select from the existing ringtones or upload custom ringtones (not implemented in all versions).

NETWORK CONNECTIONS

Adjust the LAN and VLAN settings.

INSTALLING THE LEG STANDS/ WALL MOUNTS

The Condor can be either propped up using leg stands, or mounted onto a wall using mounting brackets (both sets of stands come included).

INSTALLING THE LEG STANDS

To install the leg stands onto the Condor:

- Align the teeth on the stands with the snap holes on the Condor.
- Push into place, making sure to use enough force for the stands to be securely clinked in. This can be done in any of the four stand insert locations.

INSTALLING THE MOUNTING BRACKETS

To mount the Condor onto a wall, you will need the two mounting brackets, and 4 screws (As wall types vary, screws are not included).

- Align the teeth on the mounting brackets with the snap holes on the Condor, and click into place. This can be done in any of the four stand insert locations.
- Set the Condor against the desired position on the wall, and mark the wall from inside the holes of the mounting brackets.
- Separate the brackets from the Condor, and screw them into the wall using 4 screws.
- Once mounted securely on the wall, click brackets into place on the Condor, making sure to use enough force for the brackets to be securely clinked in.

STAND INSERT LOCATIONS

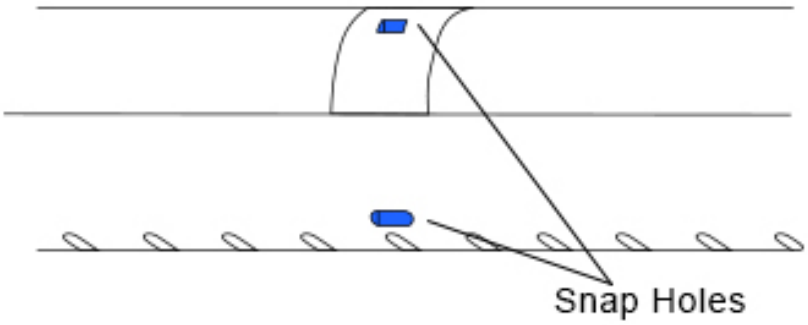

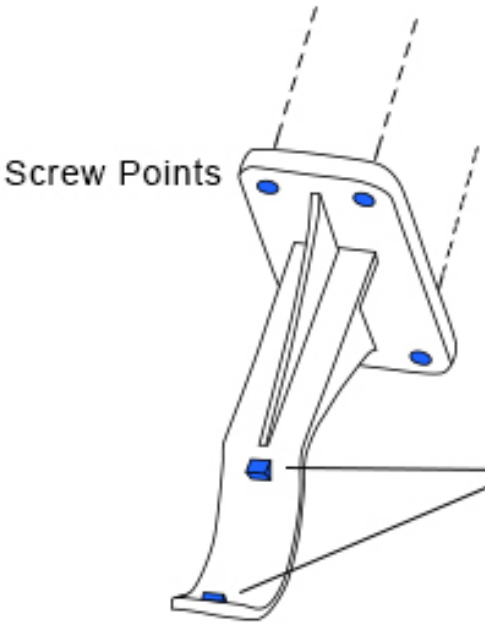

MOUNTING BRACKETS

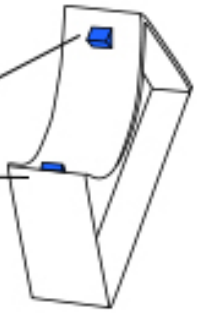

LEG STANDS

SPECIFICATIONS

- USB interface (micro B connector)
- RCA Analog Audio INPUT and OUTPUT
- Digital and Optical INPUT and OUTPUT
- Three-way bridging capability
- Frequency response 50Hz – 16KHz
- Low latency (10ms)
- Noise cancellation > 10dB (without pumping noise)
- 100% full duplex – no attenuation (in either direction) during full duplex
- High-end performance conforms to ITU-T G.167
- Acoustic echo cancellation > 40dB with conversion speed of 40dB/sec
- Residual echo is suppressed to the environment noise level, preventing artificial ducking of signal
- 15 high-quality directional microphones
- Direction-finding algorithm (determines the presence and direction of a speaker)
- Beamforming algorithm (forms and directs audio beams towards a defined direction)
- Automatic voice-level adjustment (AGC)
- Metal case and metal grill mesh for high RFI immunity and product durability
- VoIP and Signaling: SIP –RFC 3261, SDP –RFC 2327 SIP over TCP/UDP, Redundancy, Digest Authentication, PRACK, Early Media
- Data Protocols: IPv4, TCP, UDP, ICMP, ARP, RTP, SRTP, Static IP/DHCP IP Assignment, IEEE 802.1p/Q, HTTP/HTTPS/DHCP, NTP, FTP/TFTP
- Provisioning and Management: Web Server for Configuration and Management, Configuration update via FTP, TFTP, HTTP, HTTPS, DHCP Options (66, 67, 160, 12, 77,42)

Dimensions:	*Width: 48" Height: 2.25" Depth: 2"*
Weight:	*3.35 lbs.*
Power Consumption:	*500 mA from 5V ac/dc adaptor or via PoE supply*
Software:	*Plug- and -Play. No installation or drivers.* Note: Audio Setup Utility is available for Windows. The setup utility helps monitor the audio input and output level but is not required.
Operating Systems:	*Windows 98 and up / Linux / MacOS.*

Complies with FCC 47 CFR Part 68, and ACTA adopted technical criteria: TIA-968-A
Complies with FCC 47CFR Part 15; ICES-003: 2004 Issue 4, Class B; AS/NZS CISPR 22: 2006, Class B; EN 55022: 1998+A1(00)+A2(03), Class B;, EN61000-3-2: 2000+A2(05); EN61000-3-3: 1995+A2(05); EN55024: 1998+A1(01)+A2(03)
Complies with ETSI EG 201 121 V1.1.3 (2000-02); ETSI ES 203 021-2 V2.1.2 (2006-01); ETSI ES 203 021-3 V2.1.2 (2006-01)
Conforms to the requirement of the European Union Directive 2002/95EC (RoHS Directive)

LIMITED WARRANTY

The following warranty statement is effective for all Phoenix Audio Technologies' products as of October 1st, 2007

Phoenix Audio Technologies warrants that this product is free of defects in both materials and workmanship. Should any part of this product be defective, the Manufacturer agrees, at its option, to repair or replace with a like new replacement any defective part(s) free of charge (except transportation charges) for a period of two years for all products. This warranty period begins on the date the end user is invoiced for the product, provided the end user provides proof of purchase that the product is still within the warranty period and returns the product within the warranty period to Phoenix Audio Technologies or an authorized Phoenix Audio Technologies dealer according to the Product Return and Repair Policy listed below. All inbound shipping costs are the responsibility of the end user, Phoenix Audio Technologies will be responsible for all outbound shipping costs.

Product Return and Repair Policy

1. Return to seller if purchased through an authorized dealer
   a. Proof of purchase date from reseller within warranty period must be provided by the end user
   b. Seller may, at its discretion, provide an immediate exchange or repair or may return the unit to the Manufacturer for repair
2. Return to Manufacturer
   a. An RMA (return merchandise authorization) number must be obtained by the end user from Phoenix Audio Technologies
   b. The end user must return the product to Phoenix Audio Technologies with proof of purchase (showing purchase date) for a warranty claim, and display the RMA number on the outside of the shipping package

THIS WARRANTY IS VOID IF:

The product has been damaged by negligence, accident, act of God, or mishandling, or has not been operated in accordance with the procedures described in the operating and technical instructions; or; The product has been altered or repaired by other than the Manufacturer or an authorized service representative of the Manufacturer; or; Adaptations or accessories other than those manufactured or provided by the Manufacturer have been made or attached to the product which, in the determination of the Manufacturer, shall have affected the performance, safety or reliability of the product; or; The product's original serial number has been modified or removed.

NO OTHER WARRANTY, EXPRESS OR IMPLIED, INCLUDING WARRANTIES OF MERCHANTABILITY OR FITNESS FOR ANY PARTICULAR USE, APPLIES TO THE PRODUCT. MANUFACTURER'S MAXIMUM LIABILITY HEREUNDER SHALL BE THE AMOUNT PAID BY THE END USER FOR THE PRODUCT.

Manufacturer shall not be liable for punitive, consequential, or incidental damages, expenses, or loss of revenue or property, inconvenience, or interruption in operation experienced by the end user due to a malfunction in the purchased product. No warranty service performed on any product shall extend the applicable warranty period. This warranty extends only to the original end user and is not assignable or transferable. This warranty is governed by the laws of the State of California.

For more information or technical support please
refer to our website *www.phnxaudio.com*,
email us at *support@phnxaudio.com,*
or call (818) 937-4779

Phoenix Audio Technologies, 2552A White Rd., Irvine, CA 92614
Email: *info@phnxaudio.com*, Telephone: (818) 937-4774, Fax: (818) 859-1054